FOOD BUSINESS FOR SALE

wild
PROPERTY CONSULTANCY

70 High Street,
Banbury, OX16 5JG

Lucha Burrito

Lease Available

Established food business situated in town centre

01295 983 333

wild-property.co.uk

LOCATION

Banbury is a busy and growing commercial centre in North Oxfordshire with a population approaching 50,000. It has excellent communication links which is helping fuel its growth situated on the M40 and with fast rail links to London and Birmingham. The town centre is full of historic buildings with a range of shops both national and independent, professional services and a strong hospitality sector. The Council's purchase of the shopping centre and the development of a new leisure scheme opening in 2021 adjacent to the canal will provide a further boost for the town. Banbury is popular for town centre living with a number of conversion or new build schemes having taken place for apartments increasing the town's residents.

The property is situated on a busy pedestrianised part of the High Street. It has a return frontage to Butchers Row. Nearby occupiers include Subway, CEX, Lloyds Bank, White Stuff and Café Nero.

GROUND FLOOR PLAN

(not to scale)

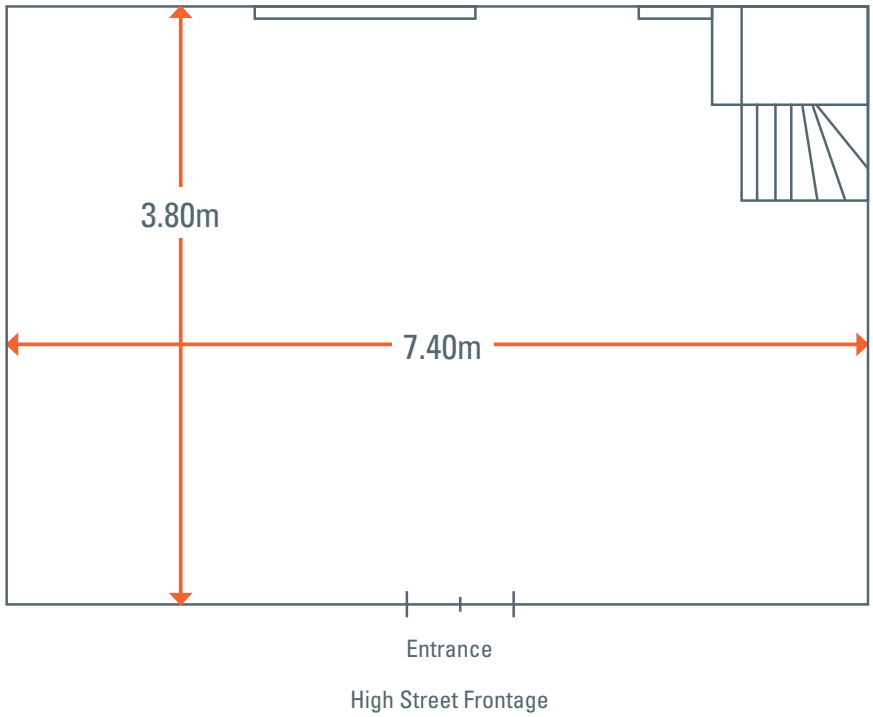

Wild Property Consultancy Ltd | 44, South Bar, Banbury, OX16 9AB | T: 01295 983 333 | E: neil@wild-property.co.uk

Commercial Property | Chartered Surveyors | Asset Management | Investment

ACCOMMODATION

The property provides a sales and seating area at ground floor with a first floor kitchen, staff WC and store, second floor office and a basement. It has been fitted out to a high standard with contemporary furnishings. The sales area has a wood floor, exposed brickwork and the first floor kitchen has various appliances.

There is seating for 10 persons inside plus a Licence for a further 9 covers externally.

GROSS FRONTAGE TO HIGH STREET	7.50 m	24 ft 8 ins
RETURN FRONTAGE	3.80 m	12 ft 6 ins
GROUND FLOOR NET AREA	26.04 sq m	280 sq ft
FIRST FLOOR KITCHEN	8.50 sq m	91 sq ft
FIRST FLOOR SUB KITCHEN	7.25 sq m	78 sq ft
SECOND FLOOR OFFICE	11.35 sq m	122 sq ft
SECOND FLOOR STORE	8.36 sq m	90 sq ft
TOTAL AREA:	61.50 sq m	661 sq ft

Basement: not measured (access via trap door).

FIXTURES AND FITTINGS

The premises includes the following;

- Counters and benches to provide seating for 10 persons
- Built in food display and serving facility with integrated heat plates, counter, shelving and till space
- Till
- Recessed spot & down lights
- Outside tables and chairs
- Drinks fridge
- CCTV system with 3 No. cameras
- 3 No. fridges and 3 No. freezers
- Double sink unit with hot & cold water
- Griddle with mechanically operating extraction hood
- 3 No. microwaves
- Rice cooker
- Stainless steel work unit
- Air con unit to ground floor

BUSINESS RATES

The Rateable Value of the property is £9,100 meaning it is within the threshold for Small Business Rates Relief. A qualifying business would not be liable for payment of any business rates. Full details can be found on the Cherwell District Council website. https://www.cherwell.gov.uk/info/191/business-rates/363/business-rates-reductions-and-relief/3

The premises are subject to a small Levy to the Banbury BID. The BID is a newly formed business organisation where funds collected are used for a range of initiatives to support the town centre. https://banburybid.com/ The charge is calculated at 1.50% of the Rateable Value and would be approximately £136 each year.

LEASE

The lease is fully Landlord & Tenant Act protected meaning the tenant has security of tenure rights under the 1954 Act legislation. The lease was granted in 2015 and expires in November 2020. The rent is £13,600 p.a. The current landlord does not charge VAT. The lease is on full repairing and insuring terms. The premium for the building insurance paid to the landlord is approximately £500 p.a. The user clause in the lease permits the premises to be used for A1 or A3 use. The landlord is two private individuals who are in principle willing to consent to a transfer of the lease or potentially to the grant of a new lease subject to terms and references.

INTERIOR – GROUND FLOOR

BUSINESS SALE

The owner of the business wishes to sell the goodwill and fixtures for a small premium. This property represents a great opportunity to develop the business situated in an excellent location. VAT may be payable on the premium.

OUTGOINGS

Apart from the rent there are very limited outgoings. There is no hire purchase on any equipment. The property benefits from business rates exemption.

VIEWINGS

Viewings must be carried out by arrangement and we would encourage anyone interested in viewing the property to first discuss their requirement with us to ensure the property is likely to be suitable. Do not discuss the sale direct with the business owner without first setting up an appointment with us.

ENERGY PERFORMANCE CERTIFICATE

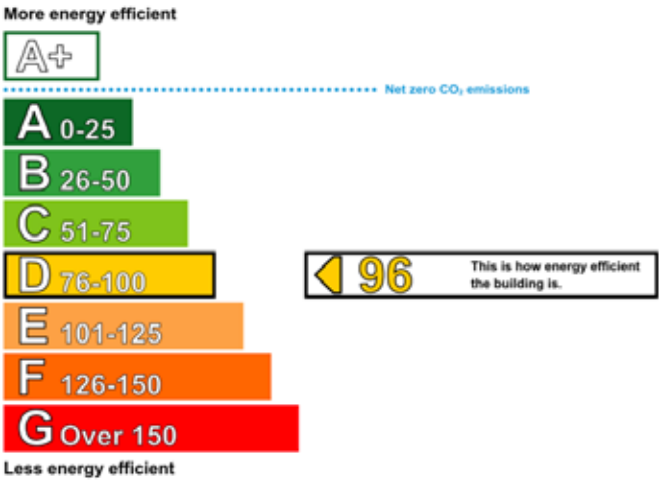

FURTHER INFORMATION

Is available from **Neil Wild**

Tel: **01295 983 333**

M: **07801 164034**

E: **neil@wild-property.co.uk**

www.wild-property.co.uk

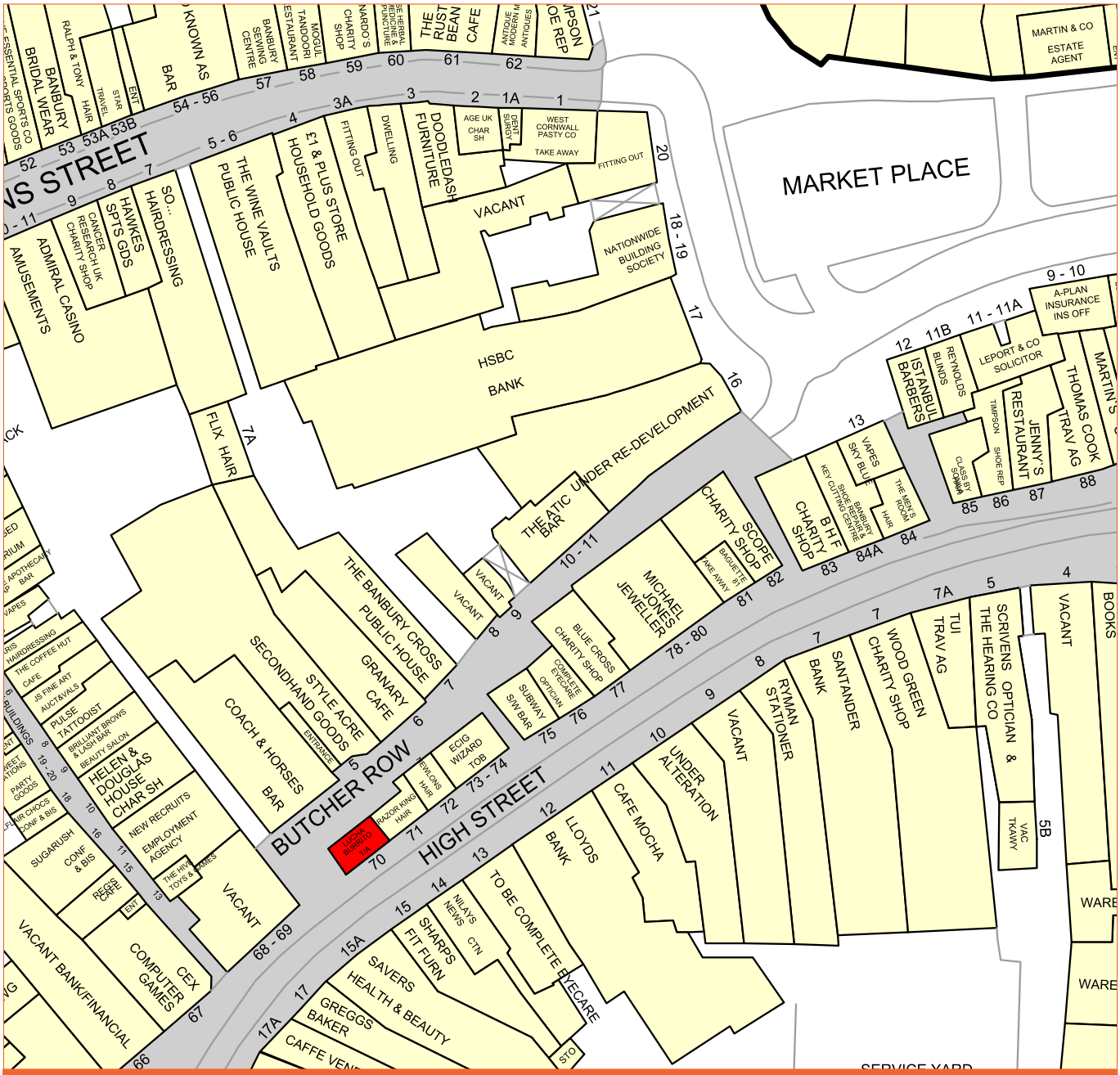

IMPORANT NOTICE

Wild Property Consultancy gives notice to anyone who may read these particulars as follows;

1. These particulars are prepared for the guidance of prospective purchasers / lessees. They are intended to give a fair overall description of the property but are not intended to constitute part of an offer or contract.
2. Any information contained herein is given in good faith but should not be relied upon as being a statement of representation or fact.
3. Nothing in these particulars shall be deemed to be a statement that the property is in good condition or otherwise nor that any services or facilities are in good order.
4. The photographs show only certain parts and aspects of the property. Certain aspects may have changed since the photographs were taken and it should not be assumed that the property remains precisely as displayed in the photographs.
5. Any areas, measurements or distances referred to are approximate only.
6. Where there is a reference to the fact that alterations have been carried out or that a particular use is made of any part of the property this is not intended to be a statement that a necessary planning, building regulations or other consent has been obtained and these matters must be verified by any intending purchaser/ lessee.
7. Descriptions of a property are inevitably subjective and the descriptions contained therein are used in good faith as an opinion and not by way of statement or fact.

Wild Property Consultancy Ltd | 44, South Bar, Banbury, OX16 9AB | T: 01295 983 333 | E: neil@wild-property.co.uk

Commercial Property | Chartered Surveyors | Asset Management | Investment